SunModo PV Rack Mounting System

UL2703 Compliant

Pub. D10039-V004

Copyright 2016

Please read carefully before installing

Product is tested to and recognized to UL 2703 standards for safety grounding and bonding equipment and meets UL 1703 fire standards.

SunModo PV Rack Mount System can be used to mount photovoltaic (PV) panels in a wide variety of locations. All installations shall be in accordance with NEC requirements in the USA. The self-grounding and bonding system is for use with PV modules that have a maximum series fuse rating of less than 30A. Mechanical design loads per UL 2703: Downward Pressure: 10 psf (478.8 Pa), Upward Pressure: 5 psf (239.4 Pa), Down-Slope: 5 psf (239.4 Pa). Mechanical test loads per IEC 61215: Maximum Downward Pressure: 50 psf (2394 Pa); Maximum Upward Pressure: 33 psf (1580 Pa), Maximum Down-Slope: 35 psf (1675 Pa).

TABLE OF CONTENTS

Installer Responsibility 3
Safety 4
SunModo Self-grounding system 5
EZ Tilt-Up System Components 6
Tools Required for Installation 10
Torque Values for EZ Tilt-Up Components 12
EZ Tilt-Up System Overview 13
Installation Instructions: 14
Fasteners and Pipe Flashing 14
EZ Tilt-Up Assembly Example 15
Tilt Leg Standoff to L-Foot and Rail 16
Tilt Leg Standoff to Adjustable Tilt Leg 16
Adjustable Tilt Leg to Rail 16
Rail Splice Installation – 1/4 or 3/8 17
1/4 Rail Splice to Rail Sections 17
3/8 Rail Splice to Rail Sections 17
Clamp Installation – Portrait Orientation 18
End Clamp Installation 18
End Clamp Attachment 18
Clamp Installation – Landscape Orientation 19
Landscape End Clamp Installation 19

Mid Clamp Installation 19
Ground Wire Attachment 20
Ground Lug Installation 20
Rail End Covers 20
Table of Clamp Bolt Lengths and Part Numbers ..... **Error! Bookmark not defined.**

Installer Responsibility

Before ordering and installing materials, all system layout dimensions should be confirmed by field measurements. SunModo reserves the right to alter, without notice, any details, proposals or plans. Any inquiries that you may have concerning installation of the PV system should be directed to your SunModo Sales representative. Consult SunModo Sales for any information not contained in this manual. This manual is intended to be used as a guide when installing SunModo EZ Tilt-Up systems. It is the responsibility of the installer to ensure the safe installation of this product as outline herein.

- Installer shall employ only SunModo products detail herein. The use of non SunModo components can void the warranty and cancel the letters of UL compliance.
- Installer shall guarantee that screws and anchors have adequate pullout strength and shear capacities.
- Installer shall adhere to the torque values specified in this Instruction Manual.
- Installer shall use anti-seize compound, such as Permatex anti-seize, lubricant is recommended for all threaded parts.
- Installer shall adhere to all relevant local or national building codes. This takes account of those that supplant this document's requirements.
- Installer shall guarantee the safe placement of all electrical details of the PV array.
- Installer shall comply with all applicable local, state and national building codes, including periodic re-inspection of the installation for loose components, loose fasteners and any corrosion, such that if found, the affected components are to be immediately replaced.
- Installer to ensure the structural support members or footings for mounting the array can withstand all code loading conditions. Consult with licensed professional engineer for the appropriate loading conditions.
- Installer to follow all regional safety requirements during installation.
- This racking system may be used to ground and/or mount a PV module complying with UL 1703 only when the specific module has been evaluated for grounding and/or mounting in compliance with the included instructions.

Safety

Review relevant OSHA and other safety standards before following these instructions. The installation of solar PV systems is a dangerous procedure and should be supervised by trained and experienced personnel.

It is not possible for SunModo to be aware of all the possible job site situations that could cause an unsafe condition to exist. The installer of the ground system is responsible for reading these instructions and determining the safest way to install the ground system. These instructions are provided only as a guide to show a knowledgeable, trained erector the correct part placement one to another. If following any of the installation steps would endanger a worker, the erector should stop work and decide upon a corrective action.

SunModo Self-grounding System

SunModo developed a proprietary grounding and bonding system that is built into the mounting hardware for the rails, clamps and splices. We provide further grounding through all of the Tilt-Up racking components.

The basis of the system is our patented stainless steel floating grounding pin which is designed to be captive in the mounting components and provides a bonding path from the PV panel frames to the rails and rail splices, and finally to the ground lug.

Mid Clamp with Ground Pins

Similarly, the rail splices the grounding pins, eliminating the need for extra bonding components.

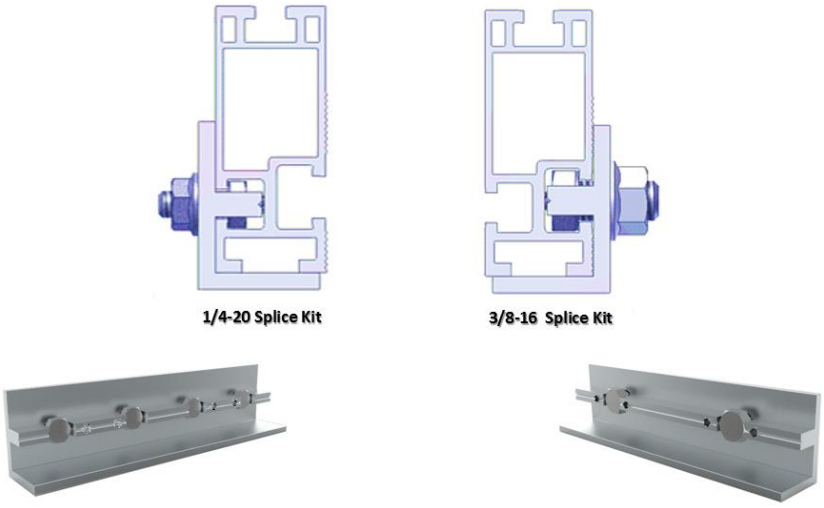

Rail Splices with Grounding Pins

EZ Tilt-Up System Components

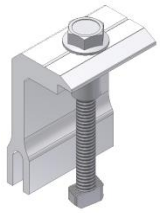	End Clamp Kit, fits panel height from 31 to 50 mm. For last 3 digits, see table on last page.	K10224-1XX
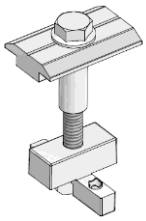	Grounding Mid Clamp Kit fits panel height from 31 to 50 mm. ***May be repositioned until torqued to final value.***	K10180-001 **For single-use only**
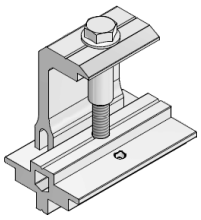	Grounding End Clamp Kit with shared rail adaptor for standard rail; fits panel height from 31 to 50 mm. For last 3 digits, see table on last page. ***May be repositioned until torqued to final value.***	K10183-1XX **For single-use only**
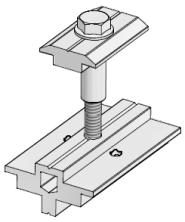	Grounding Mid Clamp Kit with shared rail adaptor for standard rail; fits panel height from 31 to 50 mm. ***May be repositioned until torqued to final value.***	K10182-001 **For single-use only**
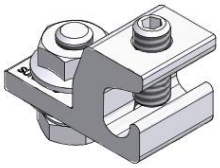	Grounding Lug Kit with Grounding Spacer and 1/4-20 T-Bolt. ***May be repositioned until torqued to final value.***	K10179-001 **For single-use only**

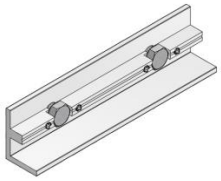	3/8” Slot Rail Splice Kit with 2X 3/8-16 hex bolts and flange nuts with integral grounding. ***May be repositioned until torqued to final value.***	K10178-001 K10178-BK1 HR250/HR350 3/8” Splice **For single-use only**
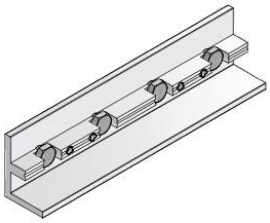	1/4” Slot Rail Splice Kit with 4X 1/4-20 Bolts and Flange Nuts with integral grounding**. *May be repositioned until torqued to final value.***	K10177-001 K10177-BK1 HR250/HR350 1/4” Splice **For single-use only** K10248-001 K10248-001-BK HR500 1/4” Splice **For single-use only**
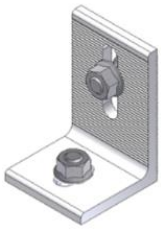	L-Foot Kit used to connect Standoffs to Rail. Kit includes L-Foot, 2X 3/8-16 X 1” Hex Bolts and Flange Nuts	K10066-003
	Top Mount Standoffs are available in three heights: 4”, 6” and 8”	A20055-00X
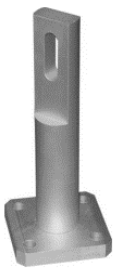	Tilt Leg Standoffs are available in three heights: 5”, 7” and 9”	A20056-00X

	Adjustable Tilt Leg Kit is supplied with Inner Sleeve, Outer Sleeve, 3X 3/8-16 Nuts and Bolts.	K10043-012 13” to 21” Adjustable Tilt K10043-020 21” to 37” Adjustable Tilt
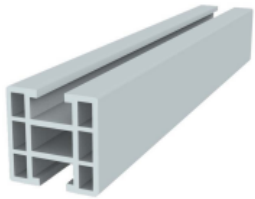	Tilt Leg Rail (Inner Sleeve). Last 3 digits denote rail length	A20011-XXX Rail sold by the inch A20011-120 120” Full Length (For on-site cutting)
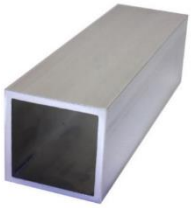	Tubing 40mm Square (Outer Sleeve). Last 3 digits denote tube length.	A20010-XXX Tubing sold by the inch A20010-120 120” Full Length (For on-site cutting)
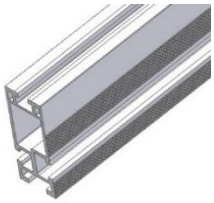	Helio Rails: Features both 1/4” and 3/8” side slots, and 1/4” top slot for clamping PV panels. Available in 84”, 124”, 164” and 206” lengths. Last 3 digits denote rail length. 4 stock sizes in clear and black.	A20144-XXX (Clear) A20144-XXX-BK (Black) HR250 (Standard Rail) A20145-XXX (Clear) A20145-XXX-BK (Black) HR350 (Heavy Rail) A20146-XXX (Clear) A20146-XXX-BK (Black) HR500 (Super Rail)
	Rail End Caps available for Helio Standard and Heavy rails (optional)	C10017-001 (Black) C10017-001-GR (Gray) HR250 (Helio Standard) C10021-001 (Black) C10021-001-GR (Gray) HR350 (Helio Heavy)

	HR150 (Open Rail): Features wire management channel and both 1/4” and 3/8” side slots, and 1/4” top slot for clamping PV panels. Available in 84”, 124”, 164” and 206” lengths. Last 3 digits denote rail length. 4 stock sizes in clear and black.	A20242-XXX (Clear) A20242-XXX-BK (Black) HR150 (Open Rail)
	1/4” Slot Echo Rail Splice Kit with 4X 1/4-20 Bolts and Flange Nuts with integral grounding**. *May be repositioned until torqued to final value.***	K10236-001 HR150 Splice Kit **For single-use only**
	Rail End Caps available for Echo rails (optional)	A20250-001 (Clear) A20250-BK1 (Black) HR150 Rail End Cover
	Helio Echo Rail Wire Management Cover: snaps into the Echo rail to manage wire bundles where needed. Available in clear and black.	K10239-001 (Clear) K10239-BK1 (Black) HR150 Wire Cover

The HR150 family of products are shown assembled above. Two HR150 Rails are spliced together with an HR150 Rail Splice. PV electrical wires are shown routed in the channels of the HR150 Rails, retained with two HR150 Channel Clips snapped into place.

Tools Required for Installation

Electric Drill or impact driver.

Note that the use of an impact driver is strongly discouraged for all stainless nut and bolt hardware.

3/8” Socket wrench

Sockets for 3/8” drive sockets, 7/16”, 1/2”, 9/16” and 1-1/16”

Torque Wrench 3/8” drive, 0 to 35 ft. lbs.

Anti-seize compound (Permatex 80071 or equivalent).

Tape measure	
Saws for cutting aluminum posts and rails as necessary	

Torque Values for EZ Tilt-Up Components

These maximum torque values must be adhered to, both for mechanical strength and to insure the performance of the integral grounding and bonding features. It is recommended that anti-seize compound be applied to the screw threads and a torque wrench be used to measure the bolt torque during final assembly.

Hardware	Torque lbs.
1/4-20 Bolts and Hex Flange Nut	7.5 ft. lbs.
1/4-20 Ground Lug, Flange Nut with 7/16 Hex Head	7.5 ft. lbs.
1/4-20 Ground Lug, Setscrew with 1/8 Allen drive.	4.2 ft. lbs. (50 in. lbs.)
1/4-20 Mid or End Clamp, Female Standoff with 7/16" Hex Head Collar Nut	7.5 ft. lbs.
5/16 Lag Bolt	25 ft. lbs.
3/8-16 Bolts and Hex Flange Nuts	15 ft. lbs.
3/8-16 T-Bolts and Hex Flange Nuts	15 ft. lbs.
3/8-16 Setscrew with 3/16" Allen	10 ft. lbs.

EZ Tilt-Up System Overview

The EZ Tilt-Up System is an adjustable single module row and low point load system that is ideal for light roof structure application. The design has an adjustable tilt leg that offers maximum flexibility and tilt degree options that maximize power output production. The installation is easy and quick which saves labor cost.

Flat Roof Mounting Standoffs combined with an L-Foot can give the system any pitch required.

SunModo offers a variety of Tilt Leg Rail sizes and sells them by the inch. 10-foot full length rail is available for on-site cutting.

Portrait and Landscape oriented PV panels are easy to configure.

Installation Instructions:

Pipe Flashing and Fasteners

There are a variety pipe flashing options, your roof installer should specify the type of pipe flashing to be used. A structural engineer should specify the type of fastener to be used. Follow the manufacturer's recommendation on the installation and torque to be used with a particular fastener type.	

EZ Tilt-Up Assembly Example

The EZ Tilt-Up shown below is just one example of the many ways the system can be configured.

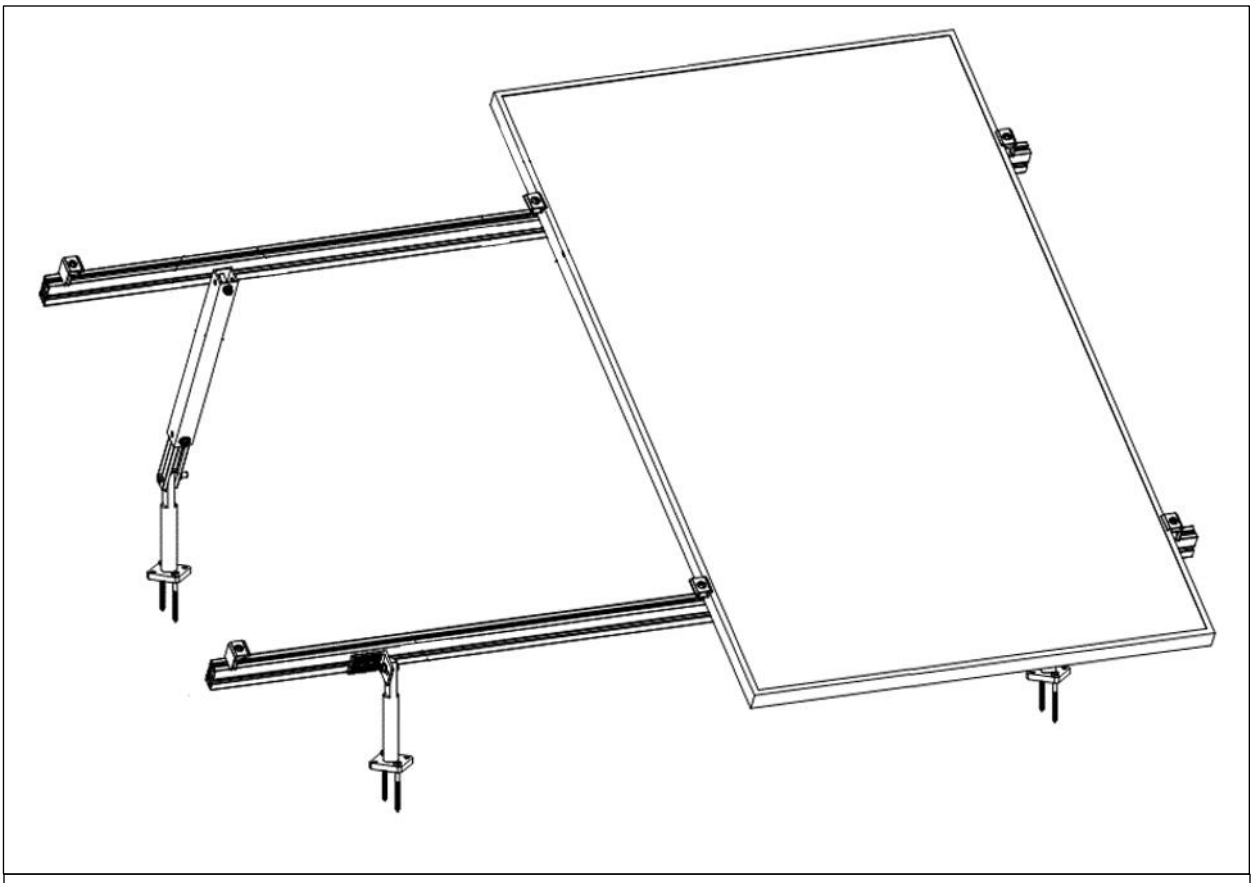

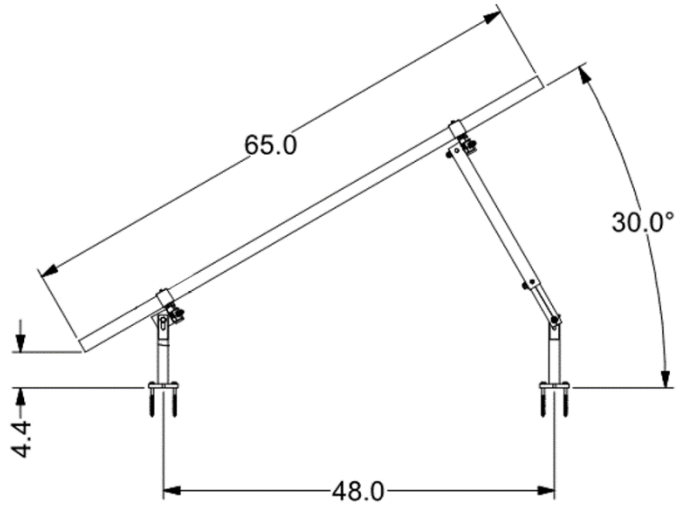

As viewed from E-W

Tilt Leg Standoff to L-Foot and Rail

Attach the L-Foot to the Tilt Leg Standoff using a 3/8 X 2-1/4” Bolt and Flange Nut. Torque to 15 ft. lbs. Attach the L-Foot to the Rail using a 3/8 X 1/2” T-Bolt and Flange Nut. Torque to 15 ft. lbs.	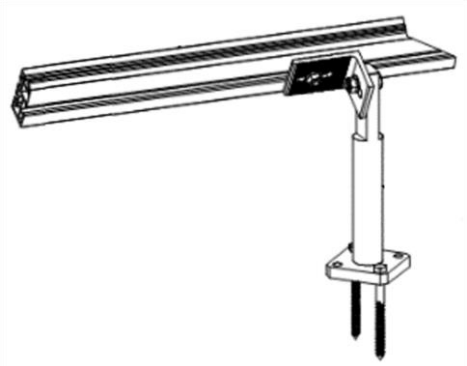

Tilt Leg Standoff to Adjustable Tilt Leg

Set Adjustable Tilt Leg to desired length and tighten. Torque to 15 ft. lbs. Attach the Adjustable Tilt Leg to the Tilt Leg Standoff using a 3/8 X 2-1/4” Bolt and Flange Nut. Torque to 15 ft. lbs.	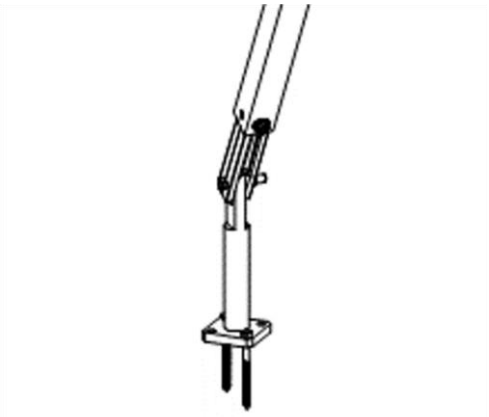

Adjustable Tilt Leg to Rail

Attach the Rail to the Adjustable Tilt Leg using a 3/8 X 2-1/4” Bolt and Flange Nut. Torque to 15 ft. lbs.	

Rail Splice Installation – 1/4 or 3/8

Where rail splicing is required, either the 2 bolts for the 3/8" rail slot or the 4 bolts for the 1/4" rail slots can be used.

Shown is the 4 bolts for the 1/4" rail slot version.

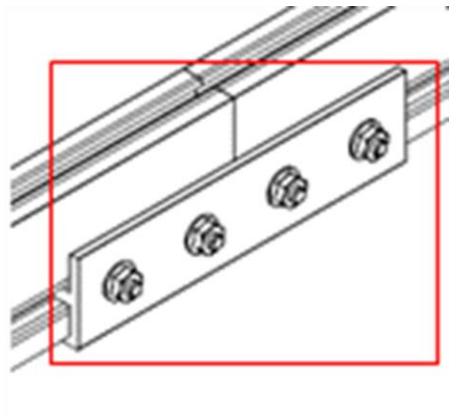

1/4 Rail Splice to Rail Sections

Where a splice is required for the Rail, the splice should be inserted before the Rail is fastened in place.

Slide the Rail Splice onto the end of the Rails and center. Torque 1/4" Flange Nuts to 7.5 ft. lbs.

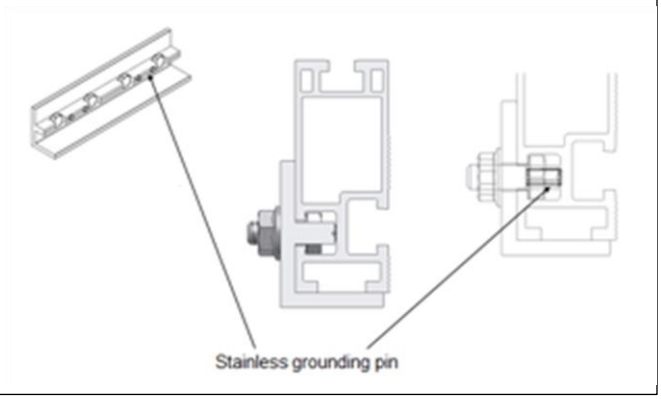

3/8 Rail Splice to Rail Sections

Where a splice is required for the Rail, the splice should be inserted before the Rail is fastened in place.

Slide the Rail Splice onto the end of the Rails and center. Torque 3/8" Flange Nuts to 15 ft. lbs.

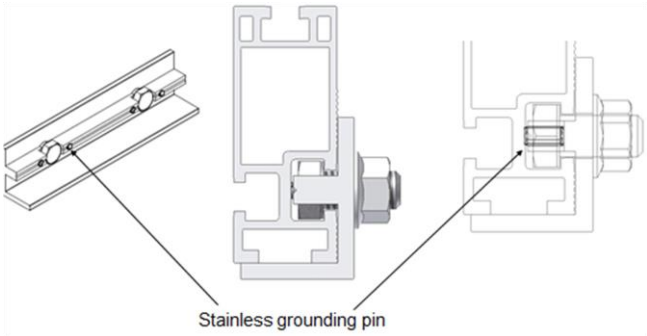

Clamp Installation – Portrait Orientation

Proceed with the mounting of the PV panels using the mid and end clamps. Specific mounting instructions are shown in the following sections for Portrait and Landscape mounting.

Installing Mid Clamps: A mid clamp is used between PV panels. It will produce 1/2" spacing between PV panel frames.

An End Clamp is used to secure PV panels at the ends of a row.

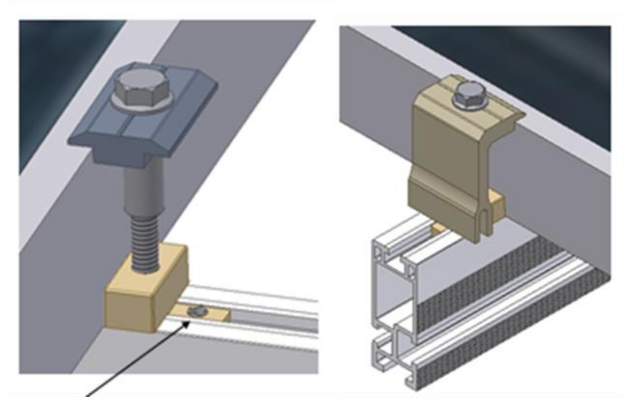

End Clamp Installation

There must be a minimum of 1.5 inches of Rail extending beyond the PV panel frame.

Clamp the PV panel frame by inserting the T-Bolt into the Rail slot. Position the End Clamp firmly against the PV panel frame and secure using the 1/4-20 Collar Bolt. Using a 7/16" socket, torque to 7.5 ft. lbs.

Note: When two or more PV panels are installed grounding via the End Clamp is optional. For a single panel configuration (shown), insert the T-Bolt into a T-Bolt Holder for grounding the panel to the Rails.

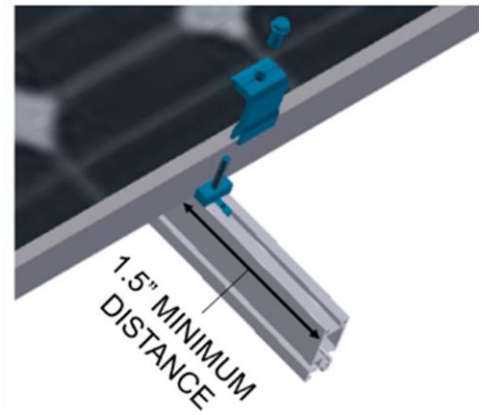

Mid Clamp Attachment

Insert the T-Bolt in the Rail slot and turn clockwise 90° to engage the head into the slot. Insert Grounding T-Bolt Holder to lock T-Bolt in place.

Thread the 1/4-20 Collar Bolt onto the top of the T-Bolt as shown. After positioning the Mid Clamp firmly against the PV panel frame, using a 7/16" socket, tighten to 7.5 ft. lbs.

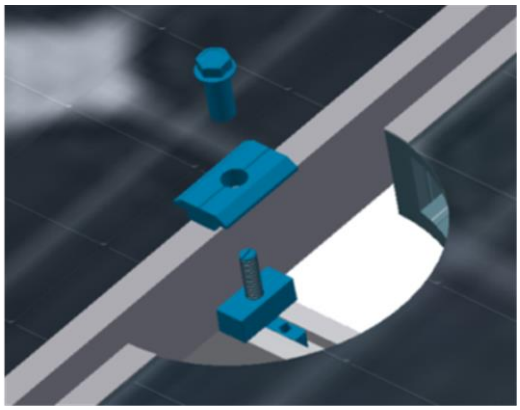

Clamp Installation – Landscape Orientation

Proceed with the mounting of the PV panels using the mid and end clamps. Specific mounting instructions are shown in the following sections for Portrait and Landscape mounting.

Installing Mid Clamps: A mid clamp is used between PV panels. It will produce 1/2" spacing between PV panel frames.

An End Clamp is used to secure PV panels at the ends of a row.

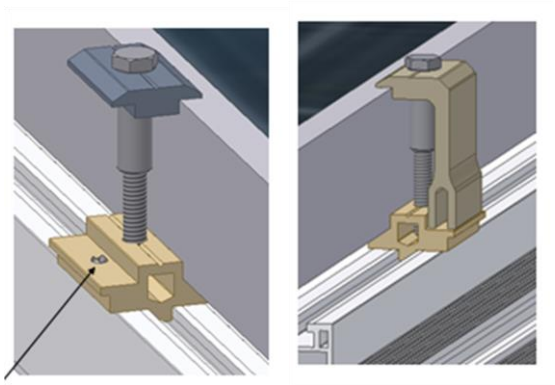

Landscape End Clamp Installation

End Clamps are used at the ends of a row of PV panels.

Insert the T-Bolt in the Rail slot and turn clockwise 90° to engage the head into the slot. Insert Grounding T-Bolt Holder to lock T-Bolt in place.

Thread the 1/4" Collar Bolt onto the top of the T-Bolt as shown. After positioning the End Clamp firmly against the PV panel frame, using a 7/16" socket, tighten to 7.5 ft. lbs.

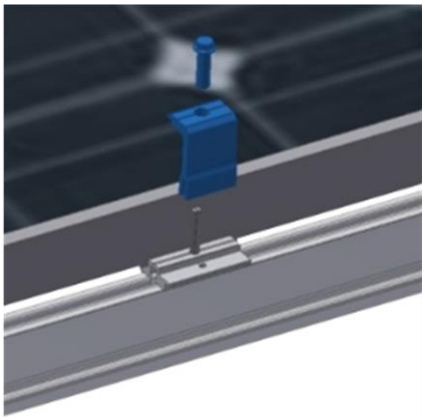

Mid Clamp Installation

Insert the T-Bolt in the Rail slot and turn clockwise 90° to engage the head into the slot. Insert Grounding T-Bolt Holder to lock T-Bolt in place.

Thread the 1/4" Collar Bolt onto the top of the T-Bolt as shown. After positioning the Mid Clamp firmly against the PV panel frame, using a 7/16" socket, tighten to 7.5 ft. lbs.

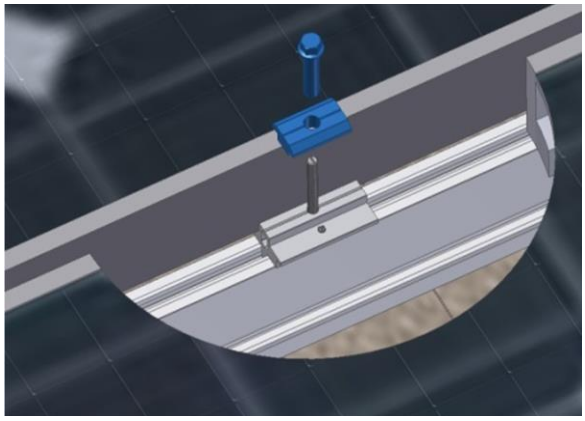

Ground Wire Attachment

The picture shows a grounding lug mounted on both Rails at the end of each row and a #6 solid copper grounding wire connecting the Ground Lugs to the building ground per NEC 690.47.	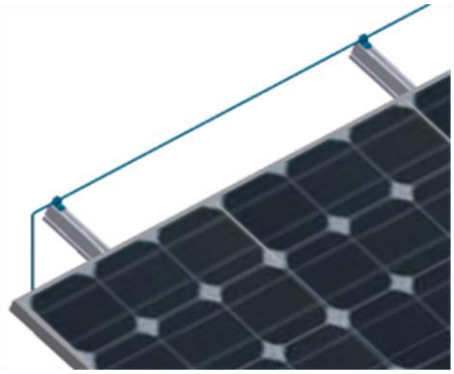

Ground Lug Installation

At the end of each row both Rails should have a Ground Lug for fastening the ground conductor to the array. The Ground Lug is mounted on the top or side of the Rail using a special 1/4" T-Bolt, Grounding Spacer, and Flange Nut. Grounding Lugs K10179-001, and detailed installation document D10003 are available from SunModo separately.	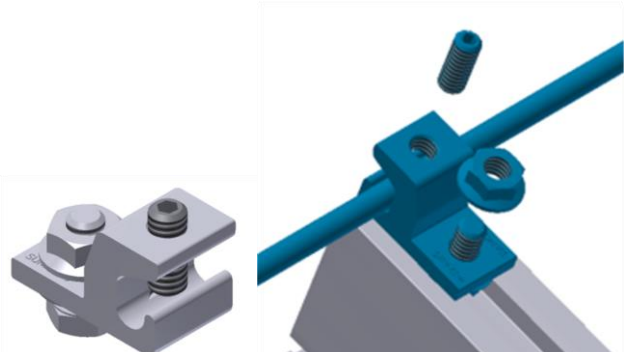

Rail End Covers

Rail End Covers can be attached to the mounting rails as shown.	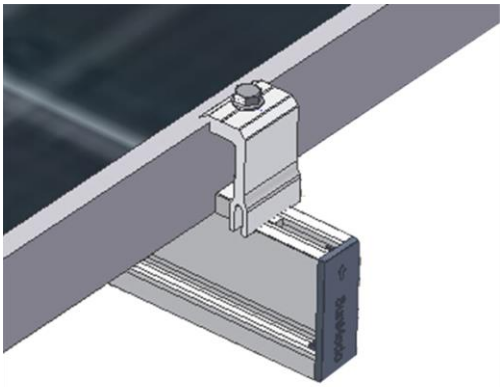

Table of Clamp Bolt Lengths and Part Numbers

Clamps	Part # End	Part # Mid	Size	"T" Bolt in.	"T" Bolt PN
Portrait	K10224-131	K10180-001	31 mm	1.77	B20015-012
Portrait	K10224-133	K10180-001	33 mm	1.77	B20015-012
Portrait	K10224-140	K10180-001	40 mm	1.77	B20015-012
Portrait	K10224-142	K10180-001	42 mm	1.77	B20015-012
Portrait	K10224-144	K10180-001	44 mm	1.77	B20015-012
Portrait	K10224-146	K10180-001	46 mm	1.77	B20015-012
Portrait	K10224-150	K10180-001	50 mm	1.77	B20015-012

Clamps	Part # End	Part # Mid	Size	"T" Bolt in.	"T" Bolt PN
Landscape	K10183-131	K10182-001	31 mm	2.10	B20015-002
Landscape	K10183-133	K10182-001	33 mm	2.10	B20015-002
Landscape	K10183-140	K10182-001	40 mm	2.10	B20015-002
Landscape	K10183-142	K10182-001	42 mm	2.10	B20015-002
Landscape	K10183-144	K10182-001	44 mm	2.10	B20015-002
Landscape	K10183-146	K10182-001	46 mm	2.10	B20015-002
Landscape	K10183-150	K10182-001	50 mm	2.10	B20015-002

Collar Nut					B20025-001

This table shows the nominal T-Bolt lengths for various PV Panels commonly used in the industry.

See www.sunmodo.com for current warranty documents and information.

SunModo Corporation
1905 E 5th St., Suite A
Vancouver, WA 98661
Ph: 360-844-0048